Silicone Edge Graphics

Installation instructions

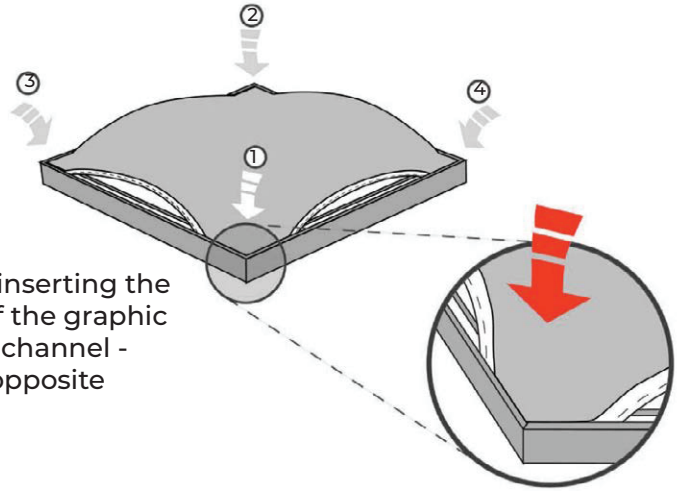

1. Begin by inserting the corners of the graphic into each channel - working opposite corners.

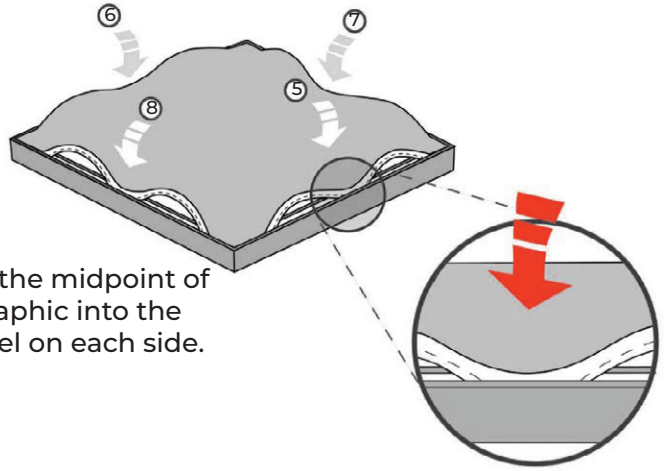

2. Insert the midpoint of the graphic into the channel on each side.

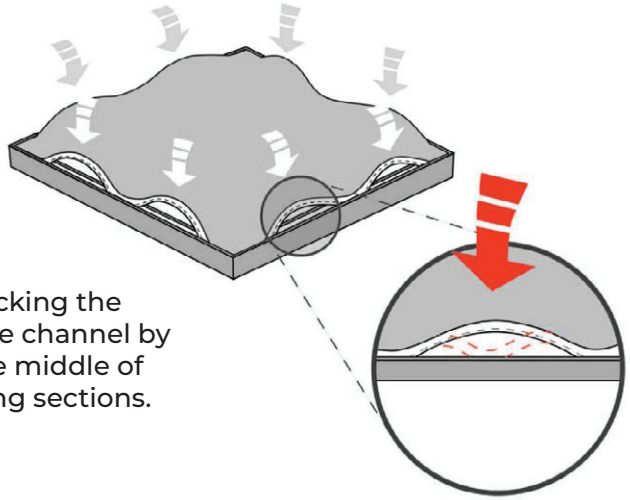

3. Continue tucking the sides into the channel by inserting the middle of the remaining sections.

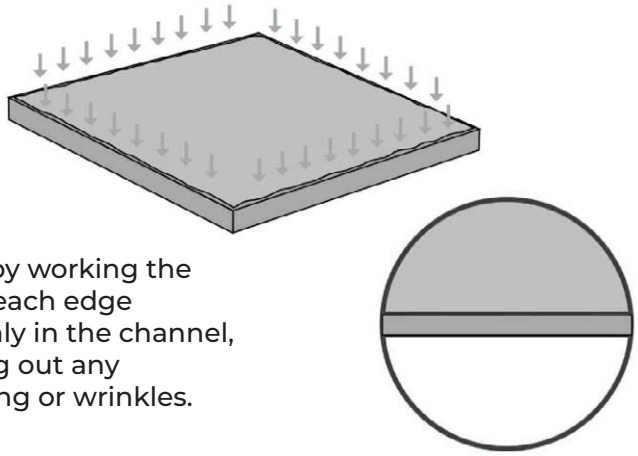

4. Finish by working the rest of each edge smoothly in the channel, working out any bunching or wrinkles.

PICTURA™

These drawings are the property of Pictura Graphics and are issued solely for the purpose of clarifying initial design concepts and are subject to change. This material is submitted in strict confidence and shall not be reproduced, copied, disclosed to competitors or used as the basis for manufacturing any components without permission.